HRU ECO 4

System 4
Continuous Mechanical Supply and Extract Ventilation with Heat Recovery

Appendix Q Eligible

Application

This high efficiency MVHR unit is ideal for all new build dwellings – especially those being built to a higher standard of air-tightness.

Description

The HRU ECO 4 is a high efficiency heat recovery unit. It has a sophisticated counter-flow heat exchanger which can recover up to 91% of the heat from the discharge air. This recovered heat is used to pre-heat the fresh air being brought in from outside.

Models

The table below lists the models available

Housing

The units for houses and apartments have the same design. The only differences are in the layout of the duct connections and motor modules. With units for houses, the air supply is situated at the lower part of the unit. In units for apartments the air supply is situated at the upper part. The motor module seals the opposite connection.

The connections on both the lower part of the unit and the upper part can be used for air extract. Unused connections are sealed with a cap.

Because of the unique patented clamp construction of the HRU ECO 4, the sealing of the different parts will be optimised. Therefore, there will be no internal or external leakage.
The unit can be easily reversed when dwelling designs are mirrored.

Weight

As a result of the unique clamping construction in combination with the plastic/synthetic elements, the weight of the heat recovery unit HRU ECO 4 is only 25 kg.

Exhaust and Supply Connections

All exhaust and supply connections have an internal diameter of 150 mm and external 180 mm. The connections can be used to attach modular plastic and metal ducts accessories directly. Each connection is stamped with an embossed indicator which shows both the direction and source of the air.

Counter Flow Heat Exchanger

The unique heat exchanger is based on the principle of counter flow. One of the characteristics of this heat exchanger is that the incoming and outgoing air is moving via triangular canals. Thus each canal is surrounded by canals in which the airflow is opposite. This creates an enormous surface area to exchange heat. This special construction is one of the reasons why up to 91% thermal efficiency can be reached.

Table 1

Type	Appliance	Connections to the dwelling		Connections to atmosphere		Inlet and exhaust capacity		
		Exhaust	Inlet	Exhaust	Inlet	Standard	Max	Pressure
HRU ECO 4	(House) 5 Core Cable	bottom + upper side	bottom	upper side	upper side	225 m^3/h	325 m^3/h	150Pa
HRU ECO 4	(House) RF	bottom + upper side	bottom	upper side	upper side	225 m^3/h	325 m^3/h	150Pa
HRU ECO 4	(Apartment) 5 Core Cable	upper side	upper side	upper side	upper side	225 m^3/h	325 m^3/h	150Pa
HRU ECO 4	(Apartment) RF	upper side	upper side	upper side	upper side	225 m^3/h	325 m^3/h	150Pa

100% Summer Bypass Valve

The heat recovery unit has a Summer bypass valve, which is completely integrated in the unit. The bypass valve diverts the air supply completely around the heat exchanger. This means the exit air from the dwelling does not heat this fresh air.

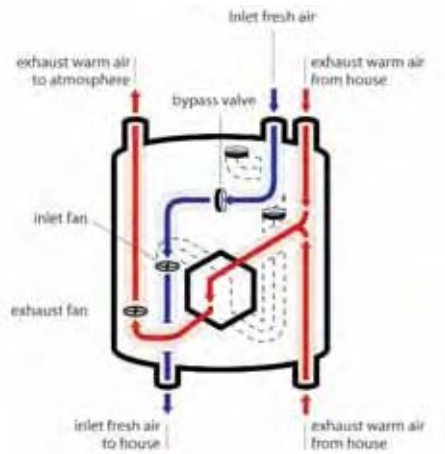

Especially during summer nights this bypass valve is desirable because the outside temperature is often lower than the temperature inside.
The fully automatic temperature controller makes sure the bypass valve being opened when:

- The inside temperature is higher than required (not adjustable)
- The inside temperature is higher than the outside temperature
- The outside temperature is for a longer period > 19° C (period depends on the exact temperature)

Both the inside and the outside temperature is measured inside the HRU ECO 4 by two integral sensors.

Frost Protection Device

To prevent the heat exchanger from freezing, a unique mechanism is standard in the HRU ECO 4. This mechanism consists of a valve, integrated on the upper part of the unit.

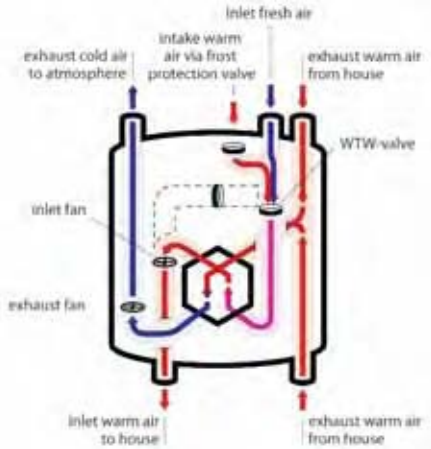

The automatic frost protection device works as follows:

- The valve is open (modulating) and extracts some air from the area in which it is installed. The air is mixed with the fresh air
- At the same time the supply fan will increase fan speed to keep the fresh air volume at the same level
- When the temperature drops the supply fan will decrease fan speed variably until a minimum is reached
- Whilst the temperature is still decreasing the exhaust fan will speed up and the supply fan will slow down
- With extreme low temperatures the supply fan is turned off, the frost protection device will be closed, but the exhaust fan will keep on working

After approx. 1.5 hours, the air supply fan will start at a minimum speed and the frost protection valve will be opened to check whether the danger of freezing is gone. When the temperature rises, all above mentioned steps will be carried out in reverse order.
All the above procedures will be carried out automatically.

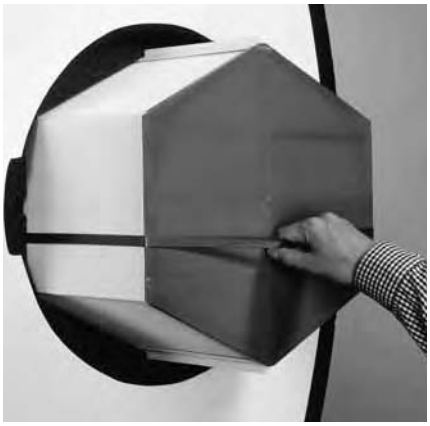

Removing the Heat Exchanger

Motors

The HRU ECO 4 is provided with two energy efficient DC motors. The impellers have backward curved blades which help to keep it clean – maximising the capacity of the supply and extract fans.

Capacity Setting

In the connection unit of the HRU ECO 4 are two potentiometers which allow for adjustment of both the low speed and high speed. The mid position is an automatically calculated value between low and high. The factory setting for high position is 225 m^3/h. To ensure the best energy efficiency this potentiometer should not be touched unless the required volumes cannot be reached when room grilles are set in their fully open position.

Filters

The HRU ECO 4 has as standard two G3 filters. One of the filters is placed between the exhaust duct from the house and the heat exchanger. The filter ensures that dust and grease are absorbed and the heat exchanger will become less dirty.

The other filter is situated between the fresh air inlet and the heat exchanger. This filter ensures that fresh air is filtered before it is supplied into the dwelling. It also prevents the heat exchanger from becoming dirty.

Both filters can be easily removed, cleaned and replaced by the occupant without the need to remove the front cover.

Appendix Q Eligible

The HRU has been tested at BRE and is certified as being an Appendix Q Eligible product. This means that the test results which are available on www.sap-appendixq.org.uk can be used to help improve SAP rating.

Installing

The heat recovery unit HRU ECO 4 is designed to be installed in different types of dwellings, from small apartments to larger houses. The unit can be placed in different places in the dwelling, like:

- In the loft, in a closed room
- In a closed storage room
- In an airing cupboard

Mounting

The unit must be fixed, with the mounting bracket, to a wall with a mass of no less than 200 kg/m^2.

Points of Attention

To ensure a good installation please pay attention to:

- Moisture resistent insulated exhaust duct to outside (min. internal diam. 150 mm)
- Damp proof thermal isolated fresh air inlet duct from outside (min. internal diam. 150 mm)
- Air inlet duct to dwelling min. internal diam. 150 mm, which can be split up in two ducts internal diam. 150 mm
- Exhaust duct from the dwelling min. internal diam. 150 mm
- Apply the provided sound insulating flexible pipe (type FGD 180-50, D=180mmm L=500mm) between the air supply to the dwelling and the unit
- Condense drain with water seal, replenishable, for a water block between the unit and the place where the unit is mounted and the waste pipe
- Mains supply must be 230V AC

Access to the Unit

The unit should be located so that it can be easily accessed for servicing. To enable easy servicing of the filters and heat exchanger there must be a space of not less than 50 cm in front of the unit.

Important

Make sure that nothing is placed on top of the automatic frost protection valve. As, when the valve opens a foreign object falling in would prevent the mechanism from working.

Installation and User Manual

The installation and user manual are delivered with the unit. Make sure to read these manuals before installing or using the unit. If required the installation manual can be obtained from Itho Ventilation Limited prior to delivery of the unit.

Easy access

Maintenance

The maintenance of the unit involves only the following:

- Clean the filters when the dwelling is completed.

  These filters may be dirty because of building materials
- Clean the filters every 6 to 9 months.
- Replace the filters at least once a year
- Clean the heat exchanger every six years
- Depending on the pollution, also clean the motor and fan blade

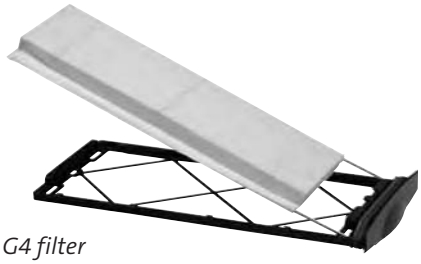

G4 filter

New filters are available in sets.
Spare parts can easily be exchanged, without tools:

- The filters can now be changed without taking the cover off
- The heat exchanger can also be reached by removing the front cover
- The complete service module (motors, fans, power supply and controls) can be removed or replaced without disconnecting the ducts
- Data can be read by connecting a laptop with service software

Warranty

The unit has a guarantee period of 2 years from date of installation.

Accessories

A heat recovery system consists of different components. The heart is the HRU ECO 4. More information about ducting and other system components can be obtained from Itho Ventilation Ltd.

Electrical Connection

The HRU ECO 4 can be connected to a 230V 50Hz supply. A flying lead is attached to the unit as standard. When installing the unit, a double pole isolation switch must be fitted with a minimum contact gap of 3mm. Since the unit is double insulated it does not need to be earthed. As standard, the electrical connection on the unit is positioned on the left hand side. When the unit is reconfigured for opposite installation the electrical connection will be positioned on the right hand side.

Control

The heat recovery unit HRU ECO 4 can be ordered with a choice of optional control units:

- Wired 3 step control
- Wireless (RF) 3 step control unit with timer

Wired 3 way switch

This wired control unit can be connected to the connection box of the unit, see wiring diagram.

RF 3 Speed Controller

RF 3 speed Control

If the heat recovery unit is provided with a wireless (radio frequency) remote control switch. The receiver for the control signal is fitted into the fan during factory production. The switch, which has a self-adhesive backing, should be located in the wet rooms; most likely the kitchen or bathroom within the house and can switch the unit between speed position one, two and three. Additional transmitters are available to allow the fan to be controlled from more rooms; the utility room, en-suites etc.
The last used switch is the master.
Advantages of Wireless Control:

- No drilling, fixings or electrical wiring is necessary.
- Control from every room is possible.
- Additional switches can be added at any time.
- A better indoor climate, by optimal control.

Type RS3i built in

Installing RF Control Unit

To install the RF control switch unit in the kitchen, just adhere the control unit on to a tile with the supplied double sided adhesive tape. Alternatively, the control unit can also be fixed with a screw. Each unit is supplied with an installation and user manual. Do not place the RF control switch on a metal surface.

Additional RF Control Switch Information:

- Transmission range 100m in free air.
- Transmission indoors is possible through a maximum of 2 concrete floors.
- Pointing of transmitter towards the fan is not necessary.
- No external antenna.
- Frequency 868 MHz, no licence required.

Timer Function

A timer function is also included on the RF control switch. This timer can be used to switch the ventilation to the highest speed for a period of time, for instance after an occupant has used the bathroom. The advantage is that after the run-on period of the timer, the fan will revert back to its original speed. Pressing the timer button once will switch the fan to high speed for 10 minutes. Pressing the timer button a second time will switch the unit to high speed for 20 minutes and a third press of the button will switch the unit to high speed for 30 minutes. The timer function can be over-ridden at any time by pressing either of the three speed buttons.

Wiring Diagrams

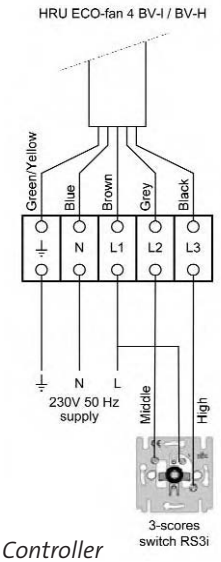

With an RS3i Speed Controller

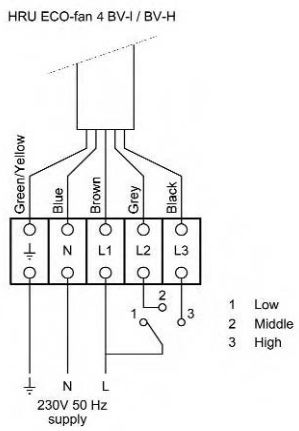

With a 3 way switch by others

Free Design Service & Training

Itho's comprehensive design service helps take the stress out of specifying a ventilation system. Offering FREE technical and design assistance for all aspects of mechanical ventilation, simple sketches and scribbled dimensions can be easily converted into a quotation and a professional plan to save you the time and the hassle.

With an in-depth knowledge of current UK Building Regulations (England, Wales, Scotland & Northern & Southern Ireland), all plans are guaranteed to comply with all current legislations.

With the ability to both send and receive all plans electronically and manually, this free design service has been specifically developed to help make your life easier.

Within its UK Head Office in Burton on Trent, Itho houses a fully equipped training facility and often runs industry relevant courses for both Specifiers and Installers that help offer a greater understanding of the importance of ventilation.

For those in need of CPD level courses, the following are currently available:

- Energy Efficient Ventilation & the future of ventilation systems.
- Importance of Installation Practice to Maximise System Performances .

To find out more please forward your request to: info@itho.co.uk

Schiedam Head Office and Factory visits can be arranged for key industry personnel and provide the perfect arena to learn more about Itho's history and their continued drive for improvement.

Technical Specifications

	Capacity [m³/h]	Pressure [Pa]	Power [W]*	Current [A]*	Voltage [V]*	Cos phi *	Technical efficiency [%]
Step 1 Min	50	10	10	0.07	230	0.63	98
Step 1 Low	75	20	14	0.094	230	0.65	98
Step 2 Medium	150	40	39	0.32	230	0.53	96.2
Step 2 Medium	150	80	45	0.37	230	0.54	96.2
Step 3 High	225	100	86	0.69	230	0.54	94
Step 3 High	225	150	100	0.79	230	0.55	94
Step 3 High	275	100	121	0.95	230	0.55	93
Step 3 High	275	150	139	1.09	230	0.55	93
Step 3 Max	325	100	172	1.32	230	0.56	92
Step 3 Max	235	150	200	1.45	230	0.58	92

* Values to be used in the EPC calculation at 230V, according to NEN5128.

Other technical specifications

Power supply:	230V
Frequency	50Hz
Dimensions:	height 848mm
	width 730mm
	depth 479mm
Condensate discharge diameter:	40mm external
Protection:	IP31
Filterclass:	G3

Technical Specifications

Sound Power Spectrum

		63Hz	125Hz	250Hz	500Hz	1000Hz	2000Hz	4000Hz	total
Breakout	325 m³/h / 150 Pa	22	36	49	56	58	55	50	62
Breakout	275 m³/h / 150 Pa	20	24	48	57	56	51	46	60
Breakout	225 m³/h / 150 Pa	19	31	47	57	54	47	42	59
Breakout	150 m³/h / 80 Pa	13	26	42	45	45	39	30	50
Breakout	75 m³/h / 20 Pa	5	19	31	31	31	26	15	36
Exhaust	325 m³/h / 150 Pa	41	43	55	54	51	44	30	59
Exhaust	275 m³/h / 150 Pa	39	41	54	52	48	41	27	57
Exhaust	225 m³/h / 150 Pa	37	38	53	50	46	37	23	56
Exhaust	150 m³/h / 80 Pa	32	33	47	42	38	29	16	49
Exhaust	75 m³/h / 20 Pa	28	26	27	22	19	12	15	33
Inlet	325 m³/h / 150 Pa	45	57	64	69	68	62	58	73
Inlet	275 m³/h / 150 Pa	46	56	63	69	66	60	55	72
Inlet	225 m³/h / 150 Pa	48	55	63	69	64	58	52	71
Inlet	150 m³/h / 80 Pa	45	50	55	57	52	46	39	61
Inlet	75 m³/h / 20 Pa	40	40	40	38	36	30	19	46

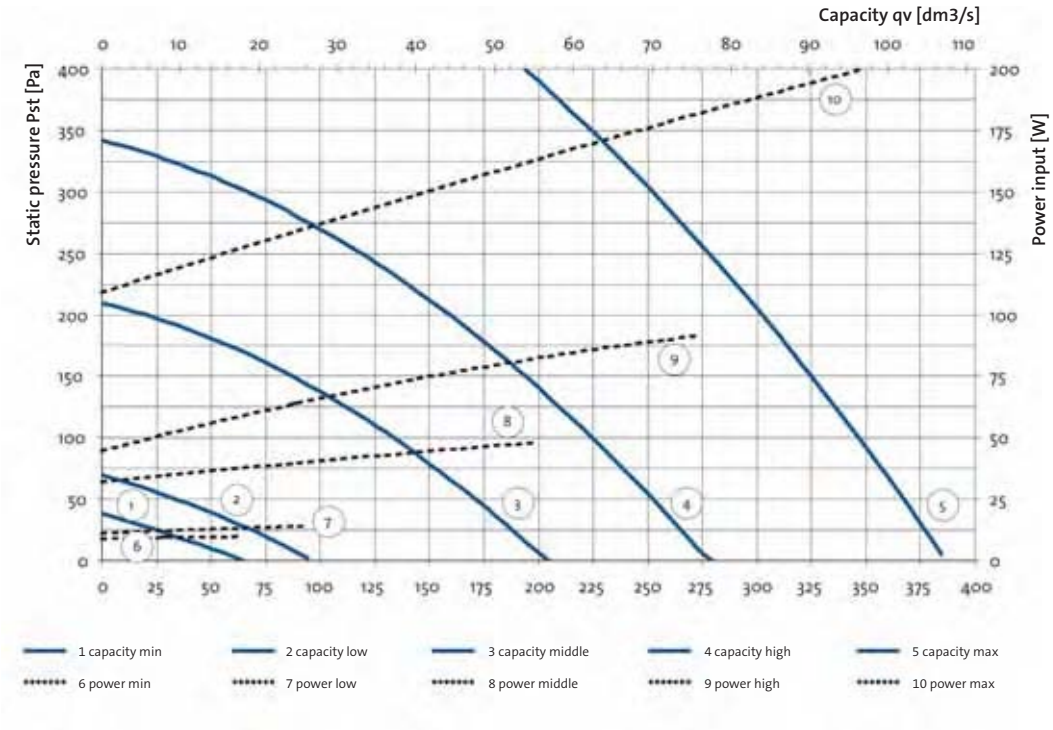

Dimensions

Suspension

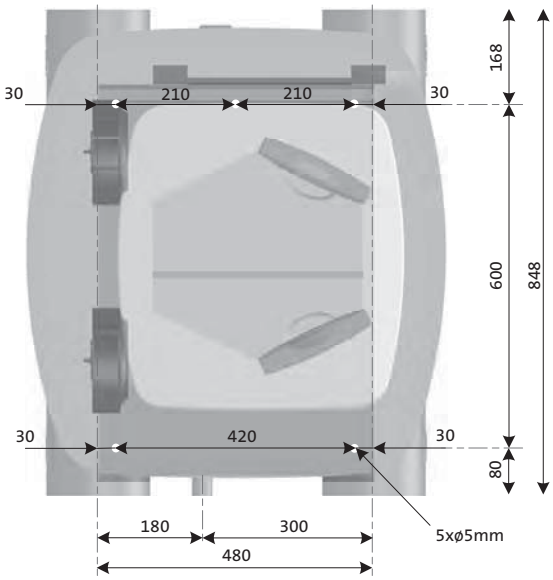

Mirrored suspension

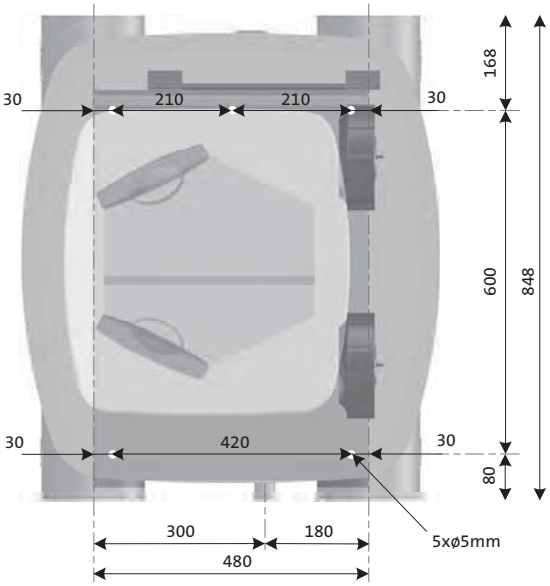

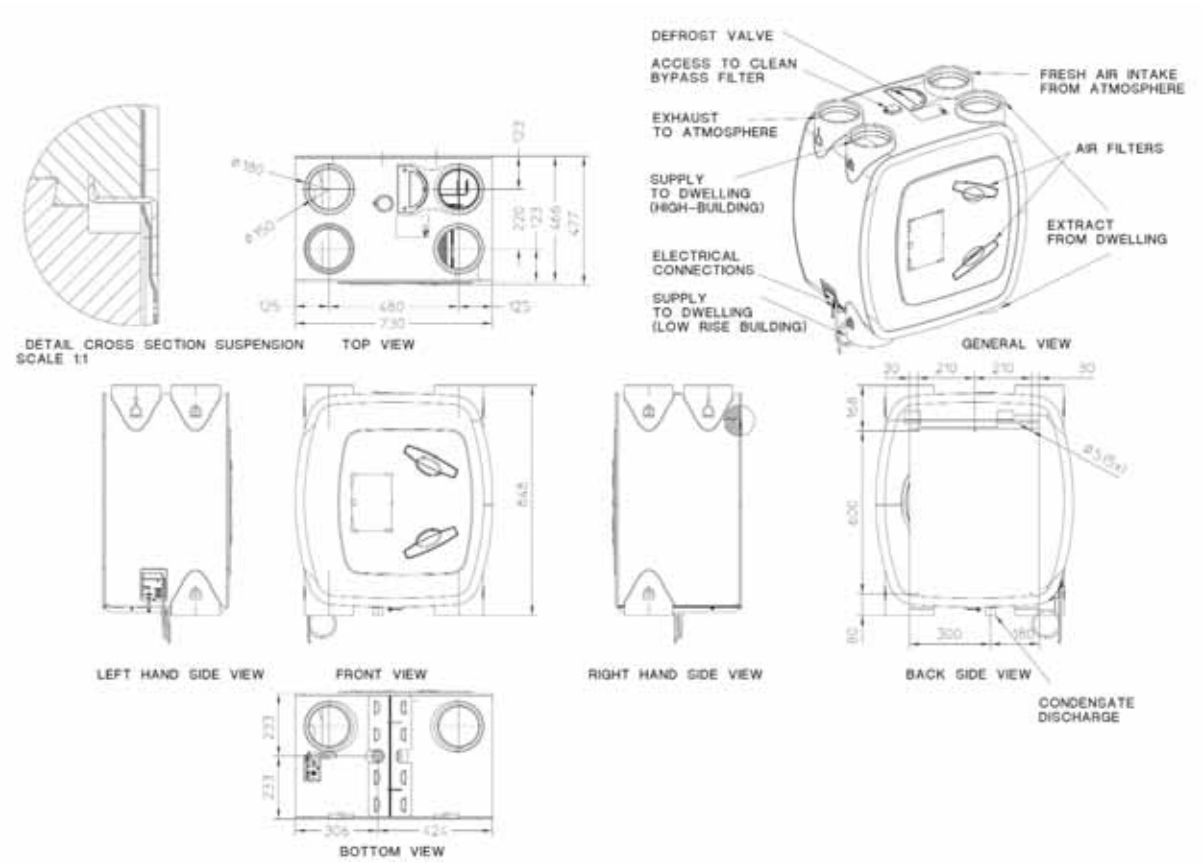

Building Regulations

The 2006 Edition of the UK Building Regulations Approved Document F1: Means of Ventilation (applicable in England and Wales) details four clearly defined systems of ventilation to dwellings. System 4 - Continuous mechanical supply and extract with heat recovery(MVHR) is complied with by the new HRU ECO 4 RF ultra-high efficiency whole house heat recovery ventilation system.

System 4 - Continuous Mechanical Supply & Extract with Heat Recovery requires a "minimum high rate" in each wet room to be achieved (kitchen 13 l/s and both utilities and bathrooms 8 l/s (sanitary only 6 l/s)).
In employing this type of system, there is no need to install background ventilators in the dwelling – an ideal solution to "noisy" sites.

The "minimum low rate" is calculated by taking the number of bedrooms in the dwelling and applying the l/s value from Table 1.1b. In addition, the rate should be no less than 0.3 l/s per m² of internal floor area (all storeys) plus, for each additional occupant over and above the anticipated two for the first bedroom and one for each of the others, a further 4 l/s must be added to the extract rate. Also, there is an addition of an allowance to be calculated for air infiltration.

The system provides quiet, uninterrupted extract ventilation from the dwelling, removing warm stale air via all of the "wet" rooms, creating a permanent air path through the property from the "dry" habitable rooms.

Air, drawn into the property by the fan, is routed through an integral high efficiency synthetic heat exchanger where warmth from the extracted air is transferred to the incoming fresh air, before it is supplied to the habitable rooms.

Building Regulations - System 4

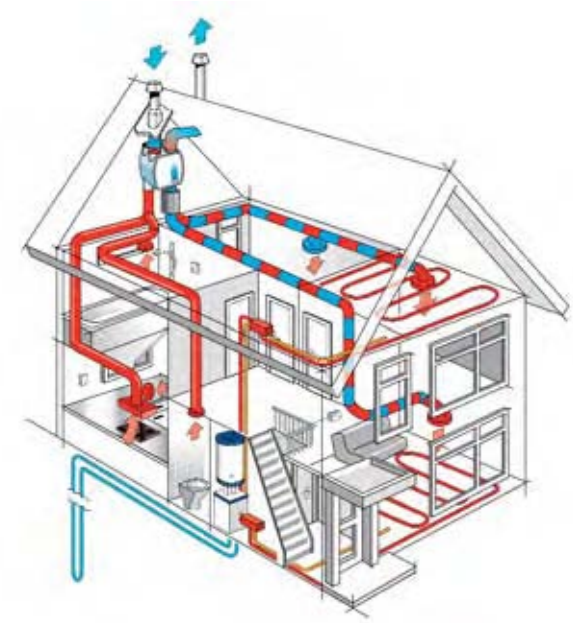

CONTINUOUS MECHANICAL SUPPLY & EXTRACT VENTILATION WITH HEAT RECOVERY

A continuous balanced mechanical central supply and extract system to be positioned in loft or cupboard space. An integral heat exchanger recovers a large percentage of heat energy that would have otherwise been lost. In employing this type of system, there is no need to install background ventilators in the dwelling.

CONTINUOUS SUPPLY AND EXTRACT

1. Determine the whole building ventilation rate from Table 1.1B. Allow for infiltration by subtracting for multi-storey dwellings: 0.04 x gross internal volume of dwelling heated space (m^3) for single storey dwellings: 0.06 x gross internal volume of dwelling heated space (m^3).

2. Calculate the whole dwelling extract rate at maximum operation by adding the individual room rates for 'minimum high rate' from Table 1.1A.

3. The required air flow rates are as follows: Maximum Extract Rate (boost) is the greater step of 1 and 2 above. The minimum individual room extract rates should be at least those given in Table 1.1A for minimum high rate. Minimum air supply rate should be at least the whole building ventilation rate in 1 above.

4. No background ventilators are required with System 4.

Table 1.1 A

Room	Minimum Intermittent Extract Rate	Continuous Rate	
		Minimum high rate	Minimum low rate
Kitchen	30 l/s (adjacent to hob); or 60 l/s elsewhere	13 l/s	Total extract rate must be at least the whole building ventilation rate in table 1.1B
Utility Room	30 l/s	8 l/s	
Bathroom	15 l/s	8 l/s	
Sanitary Accommodation	6 l/s		

Table 1.1 B

	Number of bedrooms in dwelling				
	1	2	3	4	5
Whole Building Ventilation Rate (l/s)	13	17	21	25	29
	Minimum value in any dwelling of 0.3 l/s per m^2 floor area.				

In addition, the minimum ventilation rate should not be less than 0.3 l/s per m^2 internal floor area (this includes each floor, e.g. for a two-storey building, add the ground and first floor areas).

This is based on two occupants in the main bedroom and a single occupant in all other bedrooms. This should be used as the default value. If a greater level of occupancy is expected, then add 4 l/s per occupant.

SAP Appendix Q Eligible

The HRU ECO 4 is SAP Appendix Q Eligible proving it to be one of the most energy efficient MVHR units available.

Designed to calculate the energy performance of Dwellings, the Standard Assessment Procedure (SAP) Appendix Q website: www.sap-appendixq.org.uk is a UK based Government led initiative used to demonstrate compliance with building regulations within the following areas - Part L (England and Wales), Section 6 (Scotland) and Part F (Northern Ireland), providing energy ratings for dwellings that can be compared nationally. Here are the relevant independent BRE test results for the HRU ECO 4:

Test report – SAP Appendix Q – MVHR

Test report Number 244-174
Test report issued 02/04/08

Standard Assessment Procedure 2005 – Appendix Q MVHR Product Data

Product tested HRU ECO 4

Results for Appendix Q at minimum flow rate condition

This product has only been tested with rigid ductwork and it is not applicable for SAP Appendix Q if installed with flexible ductwork.

Table Q2 – Systems with rigid ductwork only

Exhaust terminal configuration	Fan speed setting	Total flow supply rate (l/s)	Total exhaust flow rate (l/s)	Specific fan power (W/l/s)	Heat recovery efficiency (%)	Energy Saving Trust Best Practice Performance Compliant
Kitchen + 1 additional wet room	Supply & Extract – 100% variable	15.0	15.0	0.46	91	Yes
Kitchen + 2 additional wet rooms	Supply & Extract – 100% variable	21.0	21.0	0.46	90	Yes
Kitchen + 3 additional wet rooms	Supply & Extract – 100% variable	27.0	27.0	0.50	88	Yes
Kitchen + 4 additional wet rooms	Supply & Extract – 100% variable	33.0	33.0	0.56	88	Yes
Kitchen + 5 additional wet rooms	Supply & Extract – 100% variable	39.0	39.0	0.65	87	Yes
Kitchen + 6 additional wet rooms	Supply & Extract – 100% variable	45.0	45.0	0.75	87	Yes
Kitchen + 7 additional wet rooms	Supply & Extract – 100% variable	51.0	51.0	0.87	87	Yes

These figures must NOT be entered directly into the SAP worksheet or any software. They must be entered into the SAP Q Calculation Spreadsheet.

bre

As featured in the Energy Saving Trusts' 'Demonstrating Compliance - Best Practice', in order to meet reduced CO2 emission targets, MVHR units have been set certain standards and must have a specific fan power (SFP) of 1.0 W/L/s or less and a heat recovery efficiency of 85% or above. These figures have been both reached and exceeded by the HRU ECO 4, a credit to Itho's continued technological advancements.

The Energy Saving Trust's 'Best Practice' standards, along with The Code for Sustainable Homes, both offer valuable guidance toward sustainable home building and offer the industry the chance to exceed Government targets and to aspire to go that extra mile. Following years of experience in having to meet continually tightening demands, Itho always aims to stay one step ahead and continues to offer ventilation solutions that exceed current expectations.

Energy-efficient climate control systems that add to your comfort - Itho proves it can be done.

Wherever you are, live and work...chances are that you will be confronted with the products and services of Itho nearly every day. This is because we develop climate control systems for all those places where people are working, ranging from houses to offices and industrial units, from shops to restaurants, and from sports complexes to hotels and museums.

Whenever and wherever, the residents, users and owners of all these buildings ultimately have the same two wishes.
On the one hand, they want the highest possible comfort. On the other, they want the lowest possible consumption in energy.

These demands appear to be contradictory. However, here at Itho we set ourselves the objective to prove that these two demands can be combined. We possess the professionalism, drive and innovative power needed to actually deliver the evidence through figures, test results and particularly through satisfied and enthusiastic clients and users.

Itho Ventilation Limited
10 Faraday Court
First Avenue
Centrum 100
Burton on Trent DE14 2WX
T 0870 460 6741 F 0870 460 6742
E info@itho.co.uk I www.itho.co.uk

hrueco4sb0708